ADT22XA CALIBRATOR SERIES

ADT22XA Series
Multifunction Process Calibrators

(Version :1409V01)

Please download the latest version from www.additel.com

Additel Corporation .

STATEMENT

2011 Additel Corporation .All rights reserved .Specifications are subject to change without notice .

CONTENTS

ADT22XA Series Calibrators **1**
1 .Specifications **2**
2 .Safety Information **3**
3 . Accessories **4**
3 1 Standard Accessories 4
3 2 Optional Accessories 5
4 .Cautions **6**
5 .Technical Index **7**
5 1 Working Environment 7
5 2 Storage Environment 7
5 3 Electrical Parameters 7
5 4 Technical Parameters 7
6 .Summary **15**
7 .Structure and Functions **16**
7 1 Basic Structure 16
7 2 Introduction of Jacks Function 17
7 3 Key Functions 18
8 .Basic Operation **19**
8 1 Basic Mode 19
8 2 Measuring 20

8 2 1 Millivolts Measurement..... 20
8.2.2 Volts Measurement..... 20
8 2 3 Frequency Measurement..... 21
8 2 4 Pulse Counting..... 21
8 2 5 Resistance Measurement..... 22
8 2 6 Switch Test..... 22
8 2 7 Current Measurement..... 23
8 2 8 Pressure Measurement..... 23
8 2 9 Thermocouple Measurement..... 24
8 2 10 RTD Measurement..... 25
8 3 Sourcing..... 25
8 3 1 Changing the Source Value..... 26
8 3 2 Fine Tuning the Source Value..... 26
8 3 3 Reset..... 27
8 3 4 Step..... 27
8 3 5 Ramp..... 29
8 3 6 Millivolts Source..... 31
8 3 7 Volts Source..... 31
8 3 8 Frequency Source..... 31
8 3 9 Pulse Source..... 32
8 3 10 Resistance Simulation..... 32
8. 3. 11 Current Source..... 33

8.3.12 Pressure Source(only available with pressure module)..... 33
8.3.13 Thermocouples Simulation..... 34
8.3.14 RTD Simulation..... 34
8.4 Snapshot..... 35
9. Setup..... 36
9.1 RS -232 Interface..... 36
9 2 Snapshot Management..... 36
9.3 Date and Time..... 37
9.4 Utilities..... 37
9.4.1 Scientific Calculator..... 37
9 4 2 Simulate Transmitter..... 37
9.4.3 Custom RTDs Library..... 39
9 4 4 Thermal Calculator..... 41
9.4.5 Pressure Leak Test(only pressure module is available)..... 41
9.4.6 Unit Converters(Temperature, Pressure, Mass Flow and Volume Flow)..... 42
9.5 System Settings..... 42
9.5.1 Alarm Settings..... 42
9.5.2 Screen Settings..... 42
9.5.3 Auto Power Off..... 42
9.5.4 Firmware Upgrade..... 42
9.5.5 Restore Factory Settings..... 43
9.6 System Calibration..... 43

9.7 24V dc Loop Power..... 43
9.8 Display Language..... 43
9.9 Help Guide..... 44
10 .Task and AsCal..... 45
10.1 What is AsCal?..... 45
10.2 Creating a New Task..... 47
10.3 Delete/Erase Tasks..... 49
10.4 Select a Task to Be Calibrated..... 49
10.5 Viewing the Task Results..... 54
11. HART Communication(only HART is available)..... 56
11.1 Brief and Note..... 56
11.2 Connect to a HART Device..... 56
11.3 HART Process Variables..... 59
11.4 HART Diagnostics and Service..... 60
11.4.1 Loop Test..... 60
11.4.2 PV Zero Trim..... 60
11.4.3 PV Calibration..... 62
11.4.4 Special Calibration..... 63
11.4.5 Output Trim..... 64
11.5 HART Setup..... 65
11.6 Exit HART connection..... 67

ADT22XA Series Calibrators

The ADT22XA series calibrators are ultra-compact ,rugged ,durable and easy-to-use hand-held devices for sourcing , simulating ,measuring temperature and electrical signals The ADT22XA series are also designed to measure Intelligent Digital Pressure Modules .

With HART communication capability ,the ADT223A is ideal for calibrating ,maintaining and troubleshooting HART instruments With automating capabilities and documenting functionality ,the ADT22XA series calibrators provide you an all -in -one solution !

This user manual will guide you through the specifications and functions of the ADT22XA series calibrators .

For further information ,please feel free to visit our website :www additel com

1 .Specifications

Measure

Description	mV	V	mA	Hz	Pulse	ohms	On -off	RTDs	TC
ADT221A Multifunction Temperature Calibrator	●	●	●	●	●	●	●	●	●
ADT222A Multifunction Process Calibrator	●	●	●	●	●	●	●	●	●
ADT223A Documenting Process Calibrator	●	●	●	●	●	●	●	●	●

Source

Description	mV	V	mA	Hz	Pulse	ohms	RTDs	TC
ADT221A Multifunction Temperature Calibrator	●	●	●	●	●	●	●	●
ADT222A Multifunction Process Calibrator	●	●	●	●	●	●	●	●
ADT223A Documenting Process Calibrator	●	●	●	●	●	●	●	●

Other utility functions

Description	HART	Pressure Module *	Utilities	Task	Loop Power	Calibration	RS232	Snap - shot
ADT221A Multifunction Temperature Calibrator	○	○	●	●	●	●	●	●
ADT222A Multifunction Process Calibrator	○	●	●	●	●	●	●	●
ADT223A Documenting Process Calibrator	●	●	●	●	●	●	●	●

Note: ● :Available , ○ U:Unavailable ⁎ : CDP Series Intelligent Digital Pressure Modules.

2 .Safety Information

- ◆ Follow all equipment safety procedures .
- ◆ Do not operate the calibrator in hazardous environments(explosive gases ,vapors or dust).
- ◆ Do not allow the battery to come in contact to fire .Use the power adapter supplied only by Additel .
- ◆ Please refer to the intelligent pressure module user instruction for safety when using the pressure module with the 22X .

3 Accessories

3 1 Standard Accessories

◆ Calibrator	1pc
◆ 110V ⁄220V external power adapter	1pc
◆ Chargeable Li -ion battery	1pc
◆ Test leads	3 sets (6 pcs)
◆ Short circuit cable	1set (2 pcs)
◆ Users manual	1pc
◆ Certificate of calibration	1pc

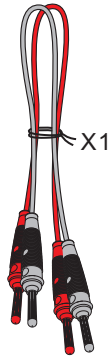

Short circuit cable

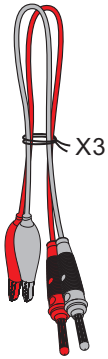

Test leads

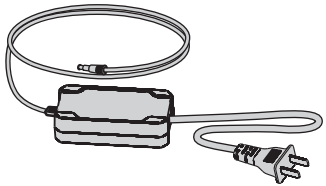

110V ⁄220V external power adapter

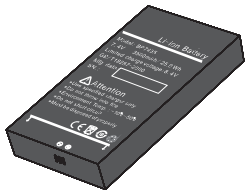

Chargeable Li -ion battery

3 2 Optional Accessories

- Intelligent digital pressure modules (for the ADT222A and ADT223A only).
- Pressure module connection cable (only when pressure module is purchased).
- Factory calibration certificate for pressure module.
- USB to Rs232 (DB-9 Male) adapter.
- Cold Junction compensation kits (includes TC plug and compensation cable, please refer to section 5.4 or contact us).

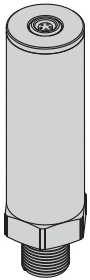

Intelligent digital pressure modules

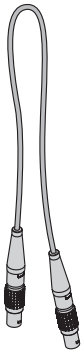

Pressure module connection cable

USB to RS232 (DB-9 Male) adapter

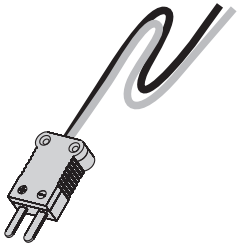

Cold Junction compensation kits

4 .Cautions

- Do not connect the test leads before toggling to another measurement or sourcing function .
- Remove all unnecessary items that may come in contact with the test leads and introduce errors .
- **Never apply more than 30V between any two electrical jacks (except when measurement is 30V range).**
- Regular cleaning and maintenance is recommended .
- Only use the power adapter supplied by Additel to recharge the battery .
- If the calibrator exhibits any unusual behavior contact Additel Corporation to help troubleshoot the problem .
- Do not disassemble the calibrator .Additel is not responsible for any misapplication or misuse of the product .

5 .Technical Index

5 1 Working Environment

- Temperature: (-10 to 50)°C.
- Relative humidity: <90% (Non-condensing).
- Atmosphere pressure: (86 to 106) kPa .

5 2 Storage Environment

- Temperature: (-20 to 60)°C.
- Relative humidity: <90% (Non-condensing).

5 3 Electrical Parameters

- Power supply: polymer Li-ion rechargeable battery or 10VDC adaptor.
- Charge mode: specified 10VDC adaptor (charging time is less than 4 hours).
- Working time: more than 15 hours (The battery icon will blink when the power is low. It will power off automatically if no power charge is left).
- To get the best sourcing and measuring performance, the battery power supply is recommended.

5 4 Technical Parameters

- Display: 3 5 inch high resolution TFT color screen.
- Size: 192mm x 100mm x 52mm (L x W x H), Weight: 0 7kg.
- Measure and source jacks: standard Φ 4mm electrical jack.
- Thermocouple measure and simulation (for cold junction and automatic compensation modes): flat mini-size connection.
- Charger connection: standard Φ 2 1mm charger jack.
- Rs232 interface: standard RS232-DB9 socket.
- Pressure module: five-pole circular push-pull connector.

- Rs232 parameter: baudrate is 2400, 4800, 9600 or 19200, data bits is 8, stop bits is 1, address is from 1 to 121.
- Real-time clock: three date formats are selectable. The year range is 2000 to 2099, and the time format is 24-hour.

Electrical Signal Measure Specifications: (working environment: 20 ± 5°C ,accuracy for one year)

Table 5-1

Function		Range	Resolution	Accuracy
Voltage DC		-75 0000 to 75 0000 mV	0 1 μ V	0 01%RD + 3 75 μ V
		-30 0000 to 30 0000 V	0 1mV	0 01%RD + 1.5 mV
Current DC		-30 0000 to 30 0000 mA	0 1 μ A	0 01%RD + 1 5 μ A
Resistance	Two -wire	0 to 400 000 Ω	1m Ω	0 02%RD + 0 02 Ω
	Three -wire	0 to 400 000 Ω	1m Ω	0 02%RD + 0 02 Ω
	Four -wire	0 to 400 000 Ω	1m Ω	0 01%RD + 0 02 Ω
	Two -wire	0 to 4000 00 Ω	10m Ω	0 02%RD + 0 2 Ω
	Three -wire	0 to 4000 00 Ω	10m Ω	0 02%RD + 0 2 Ω
	Four -wire	0 to 4000 00 Ω	10m Ω	0 01%RD + 0 2 Ω
Frequency		1 to 50000 0 Hz	0 1Hz	0 005%RD + 1Hz
Pulse		0 to 999999	1	N A
Switch		+3V to +24V		

Note 1 : When ambient temperature is (-10 to 15°C and 25 to 50°C) temperature coefficients are:

(1) Voltage, current measurement: ± (0 001%RD+0 0015%FS)/°C.

(2) 2-wire, 3-wire, 4-wire resistance measurement: ± (0 002%RD ＋ 0 001%FS)/°C.

Note 2: Input features：

(1) Voltage measurement: input impedance > 1M Ω ,overvoltage of ports is ± 300VDC.

(2) Current measurement: input impedance < 10 Ω ,overvoltage of ports is ± 1A DC.

(3) Frequency, pulse measurement: Input impedance>500M Ω ,square wave, low-level voltage < 0 3V, high-level voltage > 2V , duty cycle is from 20% to 80%, overvoltage of ports is ± 30VDC.

(4) Resistance, RTD measurement: excitation current is about 0 7mA at 400 Ω range, and about 0 3mA at 4000 Ω range, overvoltage of ports is ± 30VDC.

(5) Thermocouple, RTD measurement temperature: To be decided by the accuracy of mV measurement, resistance measurement, according to the International Temperature Scale of 1990 (ITS-90).

(6) Cold junction compensation range:-10 to 50°C,accuracy: ± 0 1°C,calibration is available.

Electrical Signal Source Specifications: (working environment: 20 ± 5°C,accuracy for one year)

Table 5-2

Function	Range	Resolution	Accuracy
Voltage DC	-10.000 to 75.000 mV	1 μ V	0.02%RD + 4.25 μ V
	0 to 12.0000 V	0.1mV	0.02%RD + 0.6 mV
Current DC	0 to 22.000 mA	1 μ A	0.02%RD + 1.1 μ A
Resistance	1 to 400.00 Ω	10m Ω	0.02%RD + 0.02 Ω
	1 to 4000.0 Ω	100m Ω	0.03%RD + 0.4 Ω
Frequency	0 to 50000.0 Hz	0.1Hz	0.005%RD + 1 Hz

Pulse	0 to 999999	1	N/A
DC24V	N/A	N/A	0 5V

Note 1: When ambient temperature is (-10 to 15°C and 25 to 50°C),temperature coefficients are:

(1) Voltage, current, resistance source:(± 0 001%RD+0 0015%FS)/°C .

Note 2: Source features:

(1) Millivolts source: Max load capability is 1mA, load variance ratio less than 50 μ V/mA.

(2) 12V source: Max load capability is 5mA, load variance ratio less than 1mV/mA.

(3) Current source: Internal 24V power supply, max load capability is 20mA@1k Ω . External power supply, the max voltage is 36V.

(4) Simulating resistance: (1 Ω to 110 Ω) excitation current (0 6mA to 4mA), (110 Ω to 400 Ω) excitation current (0 3mA to 4mA), (400 Ω to 1000 Ω) excitation current (0 06mA to 1 5mA), (1000 Ω to 4000 Ω) excitation current (0 01mA to 0 6 mA). For (1 Ω to 400 Ω) range, 1mA driving current is recommended, and for (400 Ω to 4000 Ω) range, 0 1mA driving current is recommended.

(5) Frequency pulse source Source square wave with (50 ± 10)% duty cycle, amplitude range 2V to 12V, amplitude accuracy 3% FS.

(6) Loop 24V DC power: The maximum load current is 50mA, ripple<50mV.

(7) Simulating thermocouple, RTD source: To be decided by the accuracy of mV source and resistance source, according to the ITS-90.

(8) All ports are short circuit protected.

(9) The maximum overvoltage of all the sourcing ports is ± 30VDC (less than 1 minute duration), the calibrator will be damaged if this range is exceeded.

Thermocouple Measurement, Simulation and Source Accuracy. (Working temperature: 20°C ± 5°C)

Table 5-3

Thermocouple Measurement and Source accuracy					
Measure and Simulate	Standard	Temperature Range (°C)		Accuracy(°C)	
				Measure	Source
S	IEC 584	-50 to 1768	-50 to 400	1 0	1 1
			400 to 1000	0 6	0 6
			1000 to 1768	0 7	0 8
R	IEC 584	-50 to 1768	-50 to 200	1 4	1 4
			200 to 500	0 6	0 6
			500 to 1768	0 6	0 7
B	IEC 584	0 to 1820	50 to 450	3 8	3 8
			450 to 800	0 9	0 9
			800 to 1820	0 7	0 7
K	IEC 584	-270 to 1372	-250 to -200	1 0	1 1
			-200 to -100	0 4	0 5
			-100 to 600	0 3	0 3
			600 to 1372	0 4	0 5
N	IEC 584	-270 to 1300	-250 to -200	1 5	1 6
			-200 to -100	0 5	0 6
			-100 to 1300	0 4	0 5

E	IEC 584	-270 to 1000	-250 to -200	0 6	0 7
			-200 to -100	0 3	0 3
			-100 to 0	0 2	0 2
			0 to 700	0 2	0 3
			700 to 1000	0 2	0 4
J	IEC 584	−270 to 1200	-210 to -100	0 3	0 3
			-100 to 1200	0 3	0 4
T	IEC 584	-270 to 400	-250 to -200	0 8	0 9
			-200 to 0	0 4	0 4
			0 to 400	0 2	0 2
C	ASTM E988	0 to 2315	0 to 1000	0 5	0 5
			1000 to 1800	0 7	0 9
			1800 to 2315	1 0	1 4
D	ASTM E988	0 to 2320	0 to 100	0 5	0 5
			100 to 1100	0 4	0 5
			1100 to 2000	0 6	0 9
			2000 to 2320	0 9	1 3
G	ASTM E1751	0 to 2315	0 to 200	2 4	2 4
			200 to 400	0 5	0 5
			400 to 1400	0 4	0 5
			1400 to 2315	0 7	1 0
L	DIN 43710	-200 to 900	-200 to -100	0 2	0 3
			-100 to 400	0 2	0 2

			400 to 900	0 2	0 3
U	DIN 43710	-200 to 600	-200 to 0	0 4	0 4
			0 to 600	0 2	0 3

RTD Measure, Simulate, and Source Accuracy.(Working temperature:20°C ± 5°C)

Table 5-4

RTD Measurement and Source accuracy						
Measure and Simulate	Standard	Temperature Range(°C)		Accuracy (°C)		
				Measure 2W 、 3W	Measure 4W	Source
Pt10(385)	IEC 751	-200 to 850	-200 to 200	0 65	0 60	0 65
			200 to 600	0 82	0 72	0 82
			600 to 850	0 96	0 82	0 96
PT100(385)	IEC 751	-200 to 850	-200 to 200	0 15	0 1	0 15
			200 to 600	0 26	0 16	0 26
			600 to 850	0 34	0 20	0 34
Pt100(3916)	IEC 751	-200 to 850	-200 to 200	0 15	0 1	0 15
			200 to 600	0 26	0 16	0 26
			600 to 850	0 33	0 20	0 33
Pt200(385)	IEC 751	-200 to 850	-200 to 200	0 37	0 32	0 69
			200 to 600	0 51	0 41	0 92
			600 to 850	0 61	0 48	1 08

Pt500(385)	IEC 751	-200 to 850	-200 to 200	0 . 2 0	0 16	0 36
			200 to 600	0 32	0 22	0 54
			600 to 850	0 40	0 27	0 67
Pt1000(385)	IEC 751	-200 to 850	-200 to 200	0 1	0 05	0 25
			200 to 600	0 2	0 10	0 42
			600 to 850	0 27	0 14	0 54
Cu10(427)	IEC 751	-100 to 260	-100 to 260	0 61	0 56	0 61
Cu50(385)	IEC 751	-50 to 150	-50 to 150	0 17	0 13	0 17
Cu100(385)	IEC 751	-50 to 150	-50 to 150	0 12	0 09	0 12
Ni120(672)	DIN 43760	-100 to 260	-100 to 260	0 07	0 05	0 07
Ni100(618)	DIN 43760	-100 to 260	-100 to 260	0 08	0 06	0 08

6 .Summary

The ADT22XA series calibrators are high performance instruments ,designed for the calibration and troubleshooting of variety of process instrumentation and controls .

Features :

1. Measure mA, millivolts, volts, ohms, frequency, pulses, switch, RTDs and thermocouples.
2. Source/simulate mA, millivolts, volts, ohms, frequency, pulses, RTDs and thermocouples.
3. Measuring and sourcing can be done at the same time.
4. A calibrated PRT sensor with flexible leads is installed in the equilibration block for thermocouple cold junction compensation (Patented).
5. 24V DC loop power supply which is isolated from measuring and sourcing.
6. Supports square root transmitter.
7. Captures and saves screen snapshots.
8. Creates and runs AsCal (as-found /as-left) tasks, record and document results.
9. High resolution, 3.5 inch TFT color screen.
10. HART communication capability.
11. Pulse frequency output.
12. Built-in utilities: Calculator, Transmitter Simulation, Custom RTDs Library, Pressure Leak Test and Conversion tools etc.
13. Easy to use: Smartphone-like menu and interface make the operation simpler and easier.

7 .Structure and Functions

7 1 Basic Structure

7 2 Introduction of Jacks Function

Table 7-1

Jacks	Introduction
2 & 9	① Voltage measurement, ② current measurement, ③ resistance measurement (2W), ④ switch, ⑤ pulse measurement, ⑥ frequency measurement.
2 、 9 & 10	Resistance measure (3W).
1 、 2 、 9 & 10	Resistance measure (4W).
1 & 10	HART communication (ADT223A only).
4 & 7	① Voltage source, ② current source (external power supply), ③ pulse source, ④ frequency source.
4 & 5	Current source (internal 24V dc power supply).
3 & 8	Resistance source.
5 & 6	24V DC loop source.
11	Jack for thermocouple measurement. The calibrator can provide automatic cold junction compensation function when this jack is used.
12	Jack for simulating thermocouple. The calibrator can provide the automatic cold junction compensation function when this jack is used.
Pressure module interface	Connection for Intelligent Digital Pressure Modules.
Rs232 interface	Communicating with PC.
Rechargeable jack	Charger connection.

Note: To view the position of jacks1 - 12, please refer to section 7.1.

7.3 Key Functions

Table7-2

NO.	Key	Instruction
1	⏻	Power key .
2	HART	Starts HART communications function (ADT223A only).
3	V/Hz	Selects the millivolts, volts, pulse or frequency.
4	Ω/⏚	Selects the resistance or switch test (measure function only).
5	TC/RTD	Selects the RTD or thermocouple type.
6	mA	Selects mA (current).
7		Selects pressure measurement or the pressure sourcing function (only pressure module is available).
8	Task	Starts task management.
9	Setup	Enters the Setup menu.
10	Save	Captures and saves snapshots (press and hold to access the snapshot management).
11	Esc	Exits the current page, cancels the operation. In the calculator page it, provides the clear function.
12	Enter	Confirms the selection or operation. In the calculator page, it is the equals (=) button.
13		Activates the measurement or sourcing windows, fine tunes the source value in Basic Mode. Selects the item from the drop down list. In the calculator page, it provides the arithmetic buttons(+ - ÷ ×).
14	Soft Keys	Performs the function defined by the context label.
15	Numeric Keypad	Used whenever a numeric entry is required.

8. Basic Operation

8.1 Basic Mode

The basic mode is the split screen that shows MEASURE and SOURCE areas on the display(see figure 8.1). When returning from higher level operations (e.g. Setup,Task, measuring options, sourcing options, etc), the calibrator will also return to the Basic Mode with last configured measurement and source.

In Basic Mode, you can press the navigation keys **Up/Down** to select between the MEASURE or SOURCE areas. You will see either MEASURE or SOURCE highlighted, which means this display area is active. Function toggled keys(V/Hz , Ω , TC/RTD , mA ,) are used to select the MEASURE or SOURCE function.

In the Basic Mode ,you can perform the following:

- Measure signals and zero the measured value.
  Note: The calibration data(refer to section 9.6 system calibration)will be changed once zero trim is performed ,and can be restored manually .
  Source/Simulate signals. Stepping, ramping(if allowed), set, and reset source value.
- Capture a snapshot.

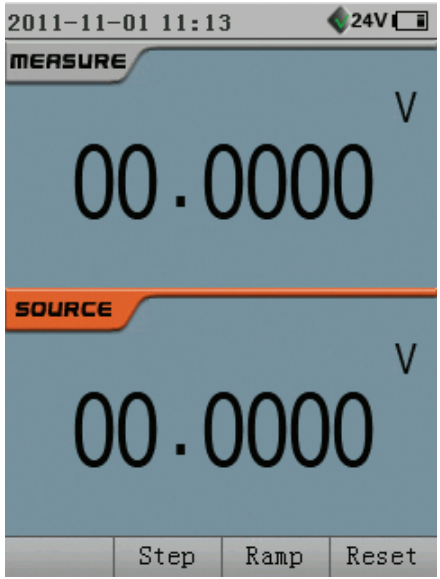

Figure 8.1 The Basic Mode

8 2 Measuring

In the Basic Mode (as Figure8 1) ,if the measurement area is active ,you can press the function keys (V/Hz , Ω/⏚ , TC/RTD , mA , ⏚) which will display the corresponding items.Anytime that you want to access the non-active area, press the desired function key twice and the non-active area will become active (e g .if the source area is active and you would like to change the measure function from mA to V then press V/Hz twice and the measure area becomes active and the V/Hz list appears for you to chose from). To change any of measurement parameters , the measurement area must be in an active state . Areas can also become active by selecting the Up/ Down keys .

8 2 1 Millivolts Measurement

1 .Figure 8 2 shows the millivolts measurement connections .

2 . If the measurement is area active , press V/Hz once , or press V/Hz twice .

3 .Press the navigation keys **Up/Down** to select mV from the list , and then press **Enter** or **Done** to change the measurement.

4 .To improve measurement precision ,you can short the millivolts input ,and then press Zero to clear the measured value.

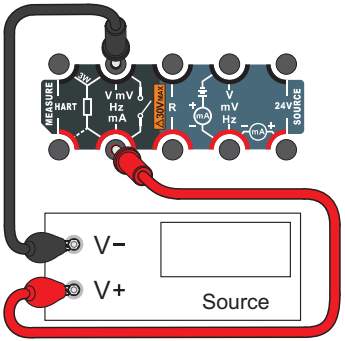

Figure 8 2 Millivolts or Volts Measurement

8 2 2 Volts Measurement

1 .Figure 8 2 shows the volts measurement connections .

2 .If the measurement area is active ,press V/Hz once ,otherwise press V/Hz twice .

3 .Press the navigation keys **Up/Down** to select the V item from the list ,and then press **Enter** or **Done** to change the measurement.

4 . To improve measurement precision , you can short the volts input , then press Zero to clear the measured value .

8 2 3 Frequency Measurement

1 .Figure 8 3 shows the frequency measurement connections .

2 .If the measurement area is active ,press V/Hz once ,otherwise press V/Hz twice .

3. Press the navigation keys **Up/Down** to select Hz from the list, then press **Enter** or **Done** to change the measurement.

8 2 4 Pulse Counting

1 .Figure 8 4 shows the pulse counting connections .

2 .If the measurement area is active ,press V/Hz once ,otherwise press V/Hz twice .

3. Press the navigation keys **Up/Down** to select Hz from the list , then press **Enter** or **Done** to change the measurement or press **Options** to show pulse counting setup interface.

4. The pulse counting option allows for the trigger edge to be selected .

5. When the pulse counting is finished ,press **Zero** to reset the counter .

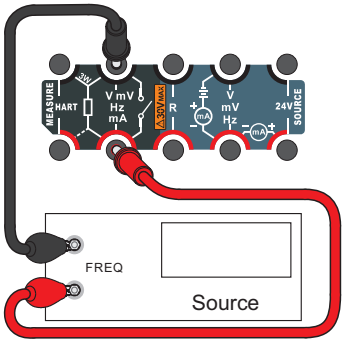

Figure 8.3 Frequency Measurement

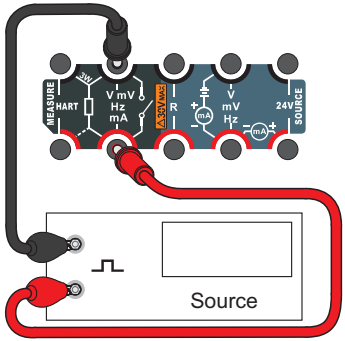

Figure 8.4 Pulse Counting

8 2 5 Resistance Measurement

1. Figure 8 5 shows the resistance measurement connections .
2. If the measurement area is active, press Ω once, otherwise press Ω twice.
3. Press the navigation keys **Up/Down** to select the desired range from the list, then press Enter or Done to change the measurement. You can also press **Options** to show resistance measurement configuration interface.
4. To improve measurement precision, you can short the resistance input, then press **Zero** to clear the measured value.

8 2 6 Switch Test

1. Figure 8 6 shows the switch test connections .
2. If the measurement area is active, press Ω once, otherwise press Ω twice.
3. Press the navigation keys **Up/Down** to select switch test from the list, then press **Enter** or **Done** to change the measurement.
4. Press **View** to view the switch test records (a maximum number of ten records are shown). A record displays the state of the switch time, and output value .

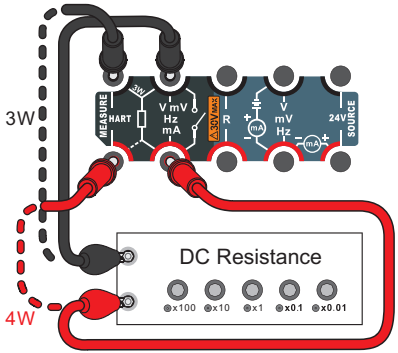

Figure 8 5 Resistance Measurement

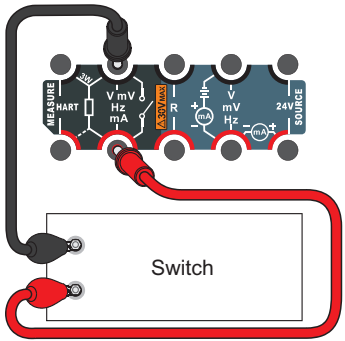

Figure 8 6 Limit Switch Test

8 2 7 Current Measurement

1 .Figure 8 7 shows the current measurement connections .

2 .If the measurement area is active, press mA once, otherwise press mA twice.

3 .Press the navigation keys **Up/Down** to select mA from the list, then press **Enter** or **Done** to change the measurement.

4 .To improve measurement precision, you can short the current input, and then press **Zero** to clear the measured value.

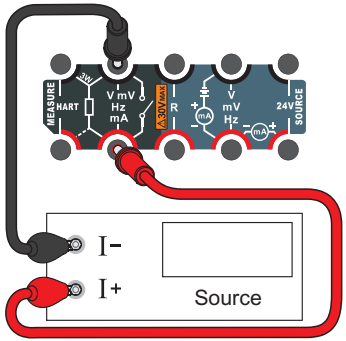

Figure 8.7 Current Measurement

8 2 8 Pressure Measurement (only pressure module is available)

When a pressure module is connected, the pressure module icon will appear in the status bar and beep at the same time. Figure 8.8 shows the pressure measurement connections.

1 .If the measurement area is active, press once, otherwise press twice.

2 .Press the navigation keys **Up/Down** to select the pressure module from the list, then press **Enter** or **Done** to change the measurement.

3 .**Units** provides you with a list of pressure units to select from.

4. You can press **Module** to view the pressure module's information and change the resolution.

5 .To improve measurement precision, you can press **Zero** to clear the measured value.

Figure 8.8 Pressure Measurement

8 2 9 Thermocouple Measurement (Temperature)

The calibrator supports thirteen standard thermocouples ,thermocouple types are identified by character :S ,R ,B ,K ,N ,E ,J ,T ,C ,D ,G ,L and U .Table 5-3 shows the temperature ranges and accuracies of these thermocouples .Thermocouple measurement accepts two reference junction compensation methods :internal reference mode or external reference mode .When using the internal reference mode ,the calibrator will automatically measure the temperature of cold junction adjacent to the thermocouple jack .When using external reference mode ,the reference temperature (value range: -10 to 50°C) must be entered manually before measurement .Figure 8 9 shows the thermocouple measurement connections .

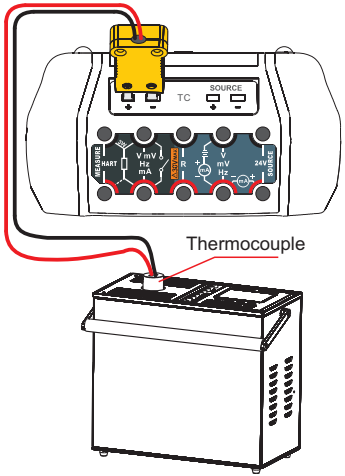

Figure 8 9 Thermocouple Measurement

To measure temperature by using thermocouple simulation ,proceed as follows :

1 .If the measurement area is active, press TC/RTD once, otherwise press TC/RTD twice .

2 .You can press the navigation keys **Up/Down** to select TC from the list, then press **Enter** or **Done** to begin measurement. Press **Options** to show the thermocouple measurement setup interface. In the thermocouple measurement setup interface, you can set the thermocouple sensor type, temperature units (°C, K, °F) and reference junction compensation method.

3 .When measuring a thermocouple ,you can press Options to show the thermocouple measurement setup interface .

4 . To get higher temperature measurement precision ,you can zero the measured value in the millivolts measurement .

8 2 10 RTD Measurement (Temperature)

The calibrator supports 11 common RTDs shown in Table 5-4 .In addition ,calibrator accepts 10 custom RTDs (to add a custom RTD please refer to 9 4 3). The calibrator accepts RTD measurement inputs in two-wire ,three-wire ,or four-wire connections as shown Figure 8 10 .The four-wire connection can provide the most precise measurement .

When using RTD input to measure temperature ,proceed as follows :

1 .If the measurement area is active ,press TC/RTD once ,otherwise press TC/RTD twice .

2 .Press the navigation keys **Up /Down** to select RTD from the list, and then press **Enter** or **Done** to change the measurement or press **Options** to view the setup interface .In setup interface ,you can set the RTD sensor type ,connections and temperature units (°C, K, °F).

3 .When measuring an RTD, you can press **Options** to view the setup interface.

4 .To get higher measurement precision, you can zero the measured value during the resistance measurement.

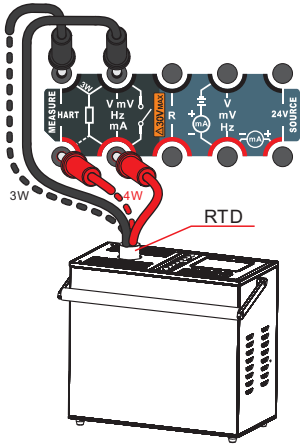

Figure 8.10 RTD Measurement

8 3 Sourcing

In the Basic Mode (Figure 8.1), if the source area is active, you can press (V/Hz , Ω , TC/RTD , mA ,) which will display the relevant source item list. If the measurement area is active, you can press the desired switch key ttwice which will activate the source area. Or by pressing the navigation keys **Up /Down,** you can activate the source area.

8 3 1 Changing the Source Value

Press any of the numeric keys in the Basic Mode, and an input box will pop up in the source display area allowing for values to be entered.

To accept the new value ,press **Enter** or **Done.**

To cancel press **Esc** or **Abort.**

Notes :

The input box will automatically close if left inactive for 15 seconds ,Any new values will not go into effect .

Any values that exceed the output range will not be accepted by the calibrator .

8 3 2 Fine Tuning the Source Value

In Basic Mode, press the navigation keys **Left /Right** to fine adjust the source value. Enter a numeric value where the cursor is flashing to replace the current source value.

To select another digit, press the navigation keys **Left /Right** again.

To exit fine adjustment, press **Esc** or **Enter** key.

Notes :

If there is no operation within 15 seconds ,the calibrator will automatically exit .

You cannot change the fine adjust if the source value exceeds the output range .

8 3 3 Reset

In the Basic Mode, volts, millivolts, frequency, resistance and current can be reset by pressing the **Reset** softkey, which will set the source value to zero .

8 3 4 Step

In Basic Mode ,the calibrator supports stepping the source value manually or automatically .First you will need to configure the step settings .Each source item (except pulse and pressure) has its own step settings .When the source is active press **Step** to view the step setup interface .Figure 8 11 and Figure 8 12 are examples of a step configuration and results .

The start value cannot be the same as the end value ,and the values cannot exceed the output range .

Stepping supports three modes :engineering units ,scale and step points .

Note :

The transfer function default setting is linear.

The run mode and step time are relevant only for auto step .The range of the step time is 1 to 3600 seconds .

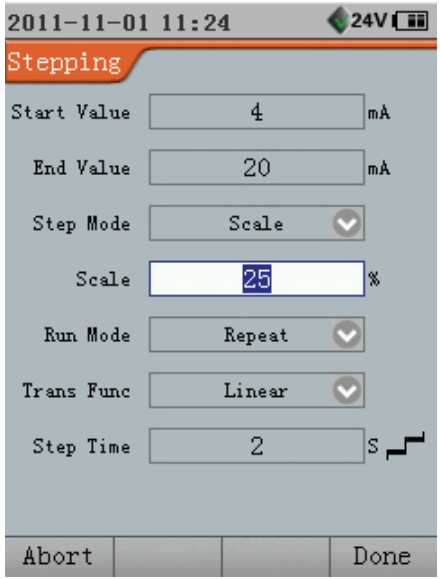

Figure 8 11 Stepping Configuration

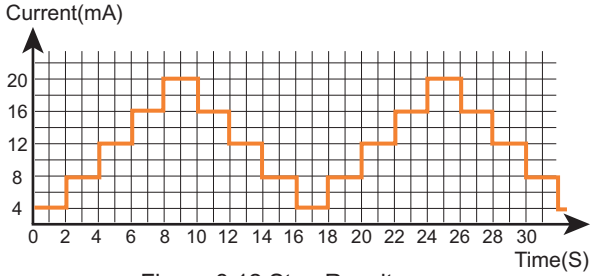

Figure 8 12 Step Results

Manual Step Mode :

1. If necessary, press the navigation keys **Up /Down** until the source area is active.
2. Press **Step** to show the step setup interface, and configure these parameters as follows:
   - Start Value (in units).
   - End Value (in units).
   - Step Mode: Eng.Units, Scale or Step Points.
   - Step Size (Scale or Count, according to the Selection of Step Mode).
   - Trans Function: Linear or Square Root.
3. To complete the step settings, press **Enter** or **Done ,** then the calibrator will Return to the Basic Mode and show the main screen.
4. Press **Manual** to start manual stepping. The softkey label will changes to **Next**.
5. To advance to the next value press **Enter** or **Next**.
6. If you want to exit manual stepping, press **Esc** or **Exit.**

Auto Step：

1 .If necessary ,press **Up** /**Down** until source is active .

2 .Press **Step** to view the step setup interface ,and configure these parameters as follows：

- Start Value (in units).
- End Value (in units).
- Step Mode :Eng .Units ,Scale or Step Points .
- Step Size (Scale or Count ,according to the Selection of Step Mode).
- Run Mode (Repeat or Single shot).
- Trans Function: Linear or Square Root .
- Step Time .

3 .To complete the step settings ,press **Enter** or **Done** then the calibrator will return to the Basic Mode and show the main screen .

4 .Press **Auto** to begin automatic stepping ,and the soft key label will change to **Pause**.

5 .Press **Pause** to pause automatic stepping .The soft key label will change to **Resume**. Press **Resume** to continue automatic stepping .

If you want to exit automatic stepping ,press **Esc** or **Exit**.

8.3.5 Ramp

In the Basic Mode ,the calibrator offers the source value ramping function .Ramping smoothly and continuously increases or decreases the source value. The size of steps is determined by the start value, end value and the ramp time. Before ramping, you need to configure the ramp settings .Each source item (except pulse ,frequency ,and pressure) has its own ramp settings . When the source area is active press Ramp to view the ramp setup interface. Figure 8.13 and Figure 8.14 are examples of the ramp setting and the ramp results.

The Start value cannot equal the End value, and their values cannot exceed the source output range.

Note :The ramp time is a single rise time, also is a single fall time. The range of ramp time is1 to 3600 seconds.

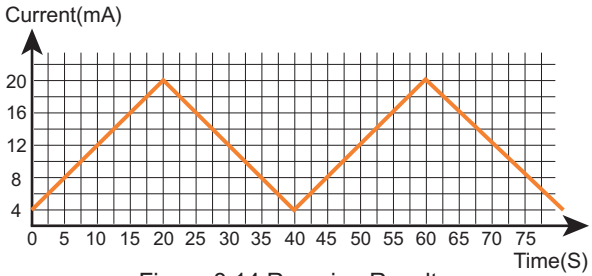

Figure 8 14 Ramping Results

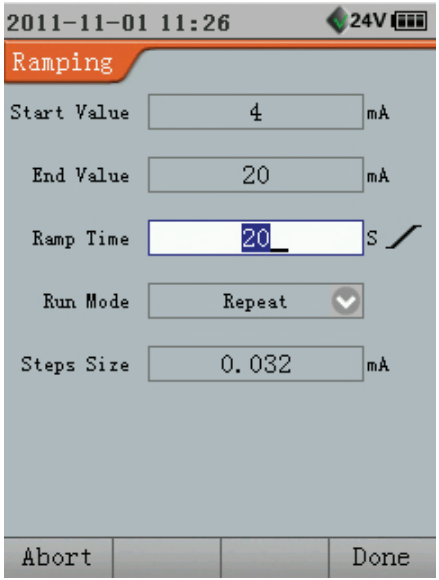

Figure 8 13 Ramp Configuration

to view the ramping setup interface, and configure the parameters

Proceed as follows to ramp:

1 .If necessary, press the navigation keys **Up/Down** until source area is active.

2 .Press **Ramp** to view the ramping setup interface, and configure the parameters as follows：

- Start Value (in sourcing units).
- End Value (in sourcing units).
- Ramp Time: a rise time also a fall time.

- Run Mode (Repeat or Single shot).

3. To complete the ramp settings, press **Enter** or **Done** then the calibrator will return to the Basic Mode showing the main screen.
4. Press **Enter** or **Start** to begin automatic ramping, and the soft key label will change to Pause.
5. Press **Pause** to pause automatic ramping, and the soft key label will change to **Resume**. Press **Resume** to resume ramping.

If you want to exit automatic ramping, press Esc or Exit.

8.3.6 Millivolts Source

1. If the source area is active, press V/Hz once, otherwise press V/Hz twice.
2. You can Press the navigation keys **Up/Down** to select mV from the list, then press **Enter** or **Done** to change the source to millivolts.
3. Refer to the section 8.3.1, 8.3.2, 8.3.3, 8.3.4 or 8.3.5, select a method to change the source value that fits your application.

8.3.7 Volts Source

1. If the source area is active, press V/Hz once, otherwise press V/Hz twice.
2. Press the navigation keys **Up/Down** to select volts from the list, then press **Enter** or **Done** to change the source to volts.
3. Refer to the sections 8.3.1, 8.3.2, 8.3.3, 8.3.4 or 8.3.5, select a method to change the source value that fit your application.

8.3.8 Frequency Source

1. If the source area is active, press V/Hz once, otherwise press V/Hz twice.
2. Press the navigation keys **Up/Down** to select Hz from the list, then press **Enter** or **Done** to change the source to frequency or press **Options** soft key to show the frequency source setup interface. In the frequency source setup interface, you can set the amplitude.

3. Refer to the sections 8 3 1, 8 3 2, 8 3 3 or 8 3 4 to select a method to change the source value according to your need.

8 3 9 Pulse Source

1. If the source area is active ,press V/Hz once ,otherwise press V/Hz twice.
2. Press the navigation keys **Up/Down** to select pulse from the list, and then press **Enter** or **Done** to change the source to pulse or press **Options** to show pulse source setup interface. In pulse source setup interface, you can set the triggering edge, amplitude and frequency.
3 .Refer to the sections 8.3.1 or 8.3.2 to select a method to change the source value according to your need, to start sourcing pulse, you must press **Start** and the soft key label will change to **Stop**.
4. If you want to stop sourcing, press **Stop**, and the soft key label will change to **Start**, where if pushed will resume sourcing.

8 3 10 Resistance Simulation

1 .If the source area is active ,press Ω/⏦ once ,otherwise press Ω/⏦ twice.
2. Press **Up/Down** to select the desired range (range 1 to 400 Ω) from the lists, and then press **Enter** or the **Done** to change the source to resistance simulation.
3. Refer to the sections 8 3 1 ,8 3 2 ,8 3 3 ,8 3 4 or 8 3 5 ,select a method to change the source value according to your need.

8 3 11 Current Source

1 .Figure 8 15 shows the current source connections.

2 .If the source area is active ,press **mA** once ,otherwise press **mA** twice .

3 .Press the navigation keys **Up/Down** to select the mA with 24V loop power or mA without 24V loop power from the list ,then press **Enter** or **Done** to switch source to current.

4 .When sourcing current with internal power ,the 24V DC loop power will indicate it is on If the 24VDC power state is OFF ,it will be automatically turned back ON after switching source to current with internal power.

5 .Refer to the sections 8 3 1 ,8 3 2 ,8 3 3 ,8 3 4 or 8 3 5 ,select a method to change the source value according to your need.

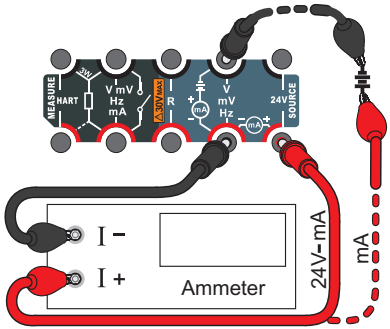

Figure 8 15 Current Source

8 3 12 Pressure Source (only available with the pressure module)

1 .Figure 8 16 shows the pressure source connections.

2 .Connect the pressure module.

3 .If the source area is active ,press **Q** once ,otherwise press **Q** twice.

4 .Press the navigation keys **Up/Down** to select the pressure module from the list ,then press **Enter** or **Done** to change the source to pressure.

5 .You can press **Units** to view and change the pressure units list which are supported by the calibrator.

Figure 8 16 Pressure Source

6 .You can press **Module** to view and change information about the pressure module .

7 .The 22XA will display the pressure in the source area as pressure is increased or decreased with an external pressure generation device (such as Additel's pressure pumps or calibrators).

8 3 13 Thermocouples Simulation

Refer to Table 5-3 for data about thermocouple types included in the calibrator .

1 .If the source area is active ,press TC/RTD once ,otherwise press TC/RTD twice .

2 .You can press the navigation keys **Up/Down** to select the TC the list ,and then press **Enter** or **Done** to switch the source to thermocouples simulation . Press **Options** to show thermocouples simulation setup interface where you can set the thermocouple sensor types , temperature units (°C ,K ,°F) and reference junction compensation methods .

3 .Refer to the sections 8 3 1 ,8 3 2 ,8 3 4 or 8 3 5 to select a method to change the source value according to your need .

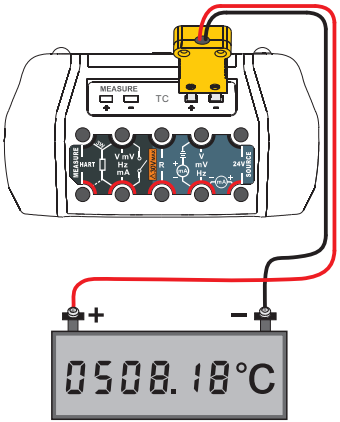

Temperature Indicator

Figure 8.17 Thermocouple Simulation

8 3 14 RTD Simulation

Refer to Table 5 -4 for information about RTD (Resistance Temperature Detector) types supported .

1 .If the source area is active ,press TC/RTD once ,otherwise press TC/RTD twice .

2 .Press the navigation keys **Up /Down** to select RTD from the lists ,and then press **Enter** or **Done** to switch the source to RTD simulation or press **Options** to show the RTD simulation setup interface .where you can set the RTD sensor type and temperature units (°C, K, °F).

3 .Refer to the sections 8 3 1 ,8 3 2 ,8 3 4 or 8 3 5 to select a method to change the source value according to your need .

8 4 Capture the snapshot

In Basic Mode, you can press **Save** to capture a snap shot. When the snapshot is successfully saved to the memory, the calibrator will display the save icon in the status bar and beep at the same time .For more details about snapshot please refer to section 9 2 Snapshot Management .

9 .Setup

Setup allows you to personalize your calibrator ,access the utilities ,and provides you with a help menu (as Figure 9-1).

While in the setup page, you can navigate to the various menus by using the navigation arrows and pressing **Select** or **Enter** to choose the items .

Figure 9.1 Setup

9 1 RS -232 Interface

The RS-232 menu allows for the selection of the address and baud rate .

9 2 Snapshot Management

Snapshot provides a paperless record of the display screen when you press **Save** in Basic Mode. A snapshot includes :snapshot name ,measuring value ,sourcing value ,reference junction compensation temperature (for thermocouples)and the loop power status and the system time .

The snapshot management menu allows for each snapshot to be viewed , settings to be changed ,and data erased .

9 3 Date and Time

To change the date and time of the calibrator ,select the date and time item on the Setup page and press **Enter** or **Select** This menu allows for the date and time to be changed and the time format to be modified if desired .

9 4 Utilities

9 4 1 Scientific Calculator

The calculator is used to perform the basic math operations .

In the calculator ,some keys are defined as specific function for the math operations (refer to Table 7-2).

9 4 2 Simulate Transmitter

The transmitter is a device which can measure temperature ,electrical signals and pressure ,etc .Generating a signal according to the measurement imposed .

The calibrator can simulate a transmitter .It can measure RTDs ,thermocouples ,frequency ,volts ,mA ,ohms and pressure (when the pressure module is connected), and output mA and volts signal .

Before starting the transmitter simulation ,you should ensure the external device is available .

An the example of an RTD Temperature Transmitter (T/I), procedure is as follows :

1 .Select the input and output quantities of the transmitter .

2 .Enter the input and output spans of the transmitter .

3 .Start running the simulate transmitter .

After selecting simulate transmitter the Quantity page will appear ,and you can chose from various sensor types and the transmitter output (as shown in Figure 9 2).

On the Range page ,set the input range 0 to 200°C and the output range 4 to 20mA .Sometimes ,it is necessary to set the transfer function :Linear ⁄Square root (as shown in Figure 9 3).

Press **Enter** or **Start** to start running the transmitter simulation .The simulation can be paused when the transmitter is working . When the simulation is paused ,both the input and output of the transmitter will also pause .

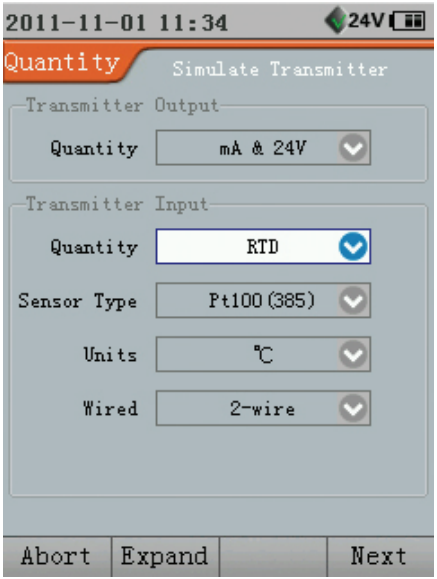

Figure 9 2 Simulate Transmitter Quantity

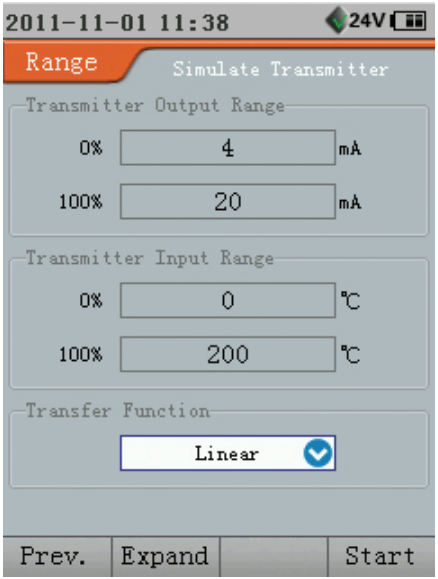

Figure 9 3 Simulate Transmitter Range

Caution :To avoid possible damage to the instrument connected to the output signal loop ,remember to scale the output signal of the simulation.

9.4.3 Custom RTDs Library

The calibrator can measure temperature with most RTDs. But sometimes there is a need to support non-standard RTDs and Standard PRTs (standard platinum resistance thermometers).

The calibrator allows you to input the customized values, so you can measure temperature using every kind of RTDs and Standard PRTs.

How to create a custom industry RTD?

To achieve higher precision with an RTD, IEC and ASTM standards specify a more complex polynomial curve fit that fine-tunes the resistance-temperature relationship. One form of that equation is given here as below. The industry RTDs also specify values for the constants R0, A, B, C (The C constant is only used for temperature less than 0°C).

$$R_t = R_0 [1+At+Bt^2+C(t-100)t^3]$$

For example, for the common Pt385 RTD with 100Ω resistance at 0℃, the values are:

$$R_0 = 100\Omega$$

$$A = 3.9083\times10^{-3}$$

$$B = -5.775\times10^{-7}$$

$$C = -4.183\times10^{-12}$$

How to create a standard PRT?

The Standard Platinum Resistance Thermometer (SPRT) Calibration Laboratory of the NIST Thermometry Group can distinguish among the ITS-90 from the argon triple point (Ar TP, -189.3442°C) to the silver freezing point (Ag FP, 961.78°C) for the calibration of SPRTs.

The ITS-90 defines temperature through a set of specified thermometric fixed points, interpolation instruments, and interpolation equations.

The calibrator uses the first and last deviation function for the calculation for SPRT .If you use other temperature ranges , b_i and c_i can be assigned to zero (I = 7, 8, 9, 10, 11).

The table 9 -1 list the sub ranges ,required calibrated in the NIST SPRT Laboratory .

Table 9 -1

Temperature range(°C)	Required Fixed Points	Deviation Function
-189 3442 to 0 01	**Ar TP ,Hg TP ,TPW**	**$\Delta W=a_4(W-1)+b_4(W-1)\ln W$**
0 to 29 7646	TPW ,Ga TP	$\Delta W=a_{11}(W-1)$
0 to 156 5985	TPW ,Ga TP ,In FP	$\Delta W=a_{10}(W-1)$
0 to 231 928	TPW ,In FP ,Sn FP	$\Delta W=a_9(W-1)+b_9(W-1)^2$
0 to 419 527	TPW ,Sn FP ,Zn FP	$\Delta W=a_8(W-1)+b_8(W-1)^2$
0 to 660 323	**TPW ,Sn FP ,Zn FP ,Al FP**	**$\Delta W=a_7(W-1)+b_7(W-1)^2+c_7(W-1)^3$**

On the RTDs Management page ,you can delete an existing RTD by pressing **Delete** and re-edit it by pressing **Enter** or **Edit** .

When the custom RTD is added to the RTDs Library successfully, your calibrator is now ready to make measurements using your custom RTD.

9.4.4 Thermal Calculator

The thermal calculator utility allows you to select thermocouple or RTD types and display the correlated voltage or resistance for specific temperatures.

Note: For the temperature range and available sensors that can be shown, please refer to Table 5-3 and Table 5-4.

9.4.5 Pressure Leak Test (only available when pressure module is used)

The calibrator supports the ability to measure and source pressure using the Additel series Intelligent Digital Pressure Modules.

To start the Pressure Leak Test, you must have a pressure module connected.

When the pressure module is on-line, select Pressure Leak Test from the Utilities list box and press Enter or Select and the Leak Test page will appear.

The **Pressure** is displayed in the top area.The pressure unit is decided by measurement or source in Basic Mode.

Test Time: The period of the leak test in hours: minutes:seconds (hh:mm:ss).

Generate pressure to your target value until the pressure is stable (To avoid damaging the pressure module from overpressure, never apply pressure above the rated maximum printed on the pressure module). Press **Enter** or **Start** to start testing.

The test time will count down and the results are displayed in the test report area.

9.4.6 Unit Converters (Temperature, Pressure, Mass Flow and Volume Flow)

The utilities include four Unit Converters : Temperature, Pressure, Mass Flow and Volume Flow.

If the value of any edit box is changed, the corresponding values will update automatically.

9 5 System Settings

9 5 1 Alarm Settings

The Alarm settings utility allow for an audible alarm to be turned ON or OFF for measurement over range ,simulate transmitter over range ,and pressure module over range conditions .

Cautions :

- To protect the calibrator ,never apply more than 30V between any two electrical jacks .
- To avoid possible damage from the connection to the output signal loop ,scale the simulation output signals .
- To protect the external pressure module ,do not operate the device over its pressure range .

9 5 2 Screen Settings

Screen settings allows you to adjust the display contrast and set the auto diming of the display .

9 5 3 Auto Power Off

The Auto Power Off setting allows for an automatic power off of the unit over a specified time or it can be set to never automatically power off .

Note :If the calibrator is connecting to a PC, auto power off disabled.

9 5 4 Firmware Upgrade

To get the most update firmware ,contact Additel Corporation .You can then use this menu to upgrade your calibrator .

1 .Connect the calibrator to a PC via serial port .

2 .Enter the user password :316 .Press **Enter** or **Done** .

3 .Start the Flash Magic program on the PC and set the parameters which are shown on the calibrator's screen .

4 .Select the correct firmware file and press start .

5 .Reboot the calibrator when the download is complete .

Note :For the Flash Magic software and firmware file ,please contact Additel Corporation .

9 5 5 Restore Factory Settings

You can restore the calibrator's settings to its original factory settings.

Caution: This operation will erase all the snapshots and tasks.

9 6 System Calibration

1. Enter the calibration password: 316.
2. Select an item from the calibration list: measurement, source and pressure module.
3. Connect to a more precise, higher-standardized unit, and finish the calibration step by step.
4. You can restore the factory calibration data by pressing Restore.

9 7 24V DC Loop Power

The calibrator supplies an internal loop power at 24V DC. You can choose an item from the dropdown list: ON and OFF.

Note: When the Source mA (internal power supply) is in use, the loop power cannot be turned off.

9 8 Display Language

The calibrator supports a multilingual user-interface. You can change the display language as follows:

1. Select the Language in the Setup page and press **Enter** or **Select**.
2. Select an item from the language list, and press **Enter** or **Done**.

9 9 Help Guide

The help guide can help you quickly master device connections and typical applications of the calibrator.

10 .Task and AsCal

10 1 What is the AsCal ?

AsCal is a typical calibration process including as-found and as-left ,and Task is the calibration procedure of a DUT **(Device Under Test).**

The ADT22XA calibrators can perform AsCal, calculate errors (Zero Error and Span Error), display results in the memory and highlight the out-of-tolerance points.

You can download tasks and upload the results with special software.The software can generate reports and certificates for the tasks.

AsCal will make your calibration faster and easier !

As Found Calibration

The As Found calibration documents the state of the instrument before carrying out any adjustments .The calibration shows the instrument's level of drift during calibration .

As Left Calibration

After routine maintenance and deficiencies detected during calibration are addressed ,an “as-left” calibration is performed. Figure10.1 gives an overview of the AsCal calibration.

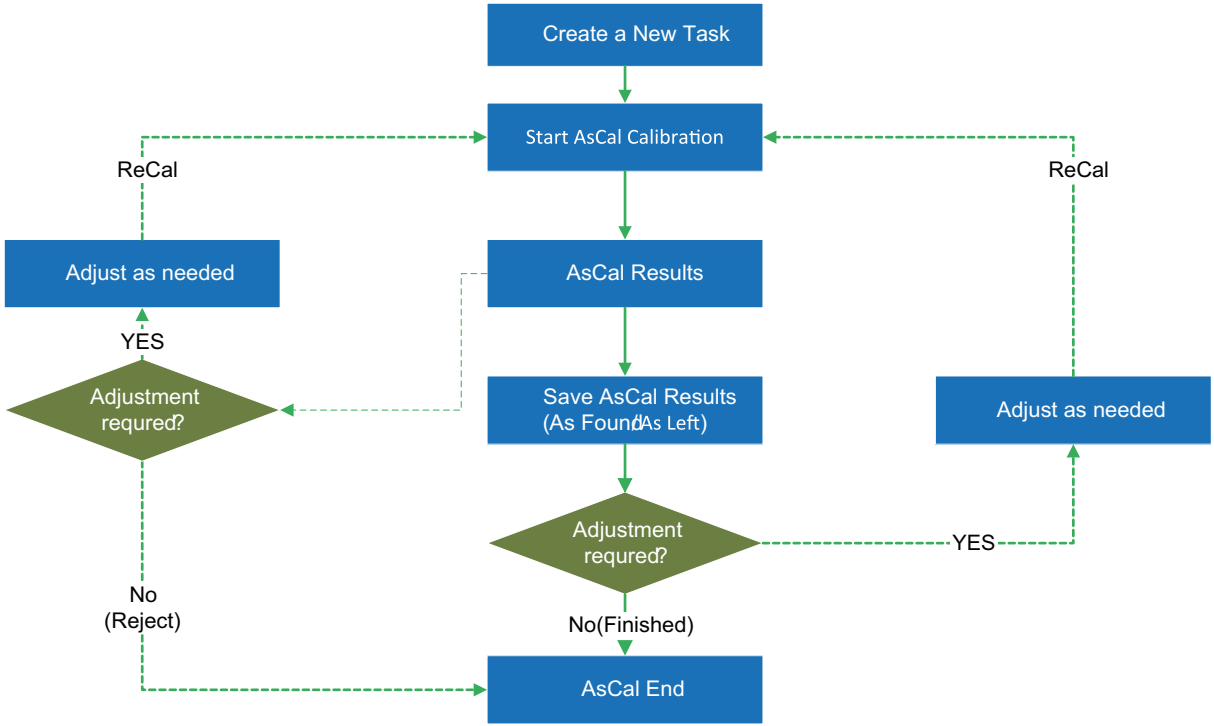

Figure 10.1 AsCal Typical Calibration Process

10 2 Creating a new Task

You can create a new task via “New Task Wizard” or download them from Additel/Cal calibration/management software .

According to different instruments, there are five types of task: RTDs (Resistance Temperature Detector), TC (Thermocouples), Loop Instruments, Flow (Delta-Pressure and Flow Meters) and Pressure Instruments.

To start your task management press **Task** in Basic Mode. Select Task List in Task Management page and press **Enter** or **Select**.On the Task List page ,you can create a new tasks ,delete tasks and run a task .

Press **New** on Task List page, and the New Task Wizard will appear. You can move the cursor by pressing the navigation keys, press **ENTER** or the **Select** to chose a task.

An example shows how to create a RTD transmitter instrument task and run it.

Editing DUT General Data

After the RTD Transmitter is selected, press Enter or Select to enter the New Task General Data page.In this page, you can input the general information of the DUT.

Editing DUT Input Data

The Input Quantity defines which fields are required.Common fields for all quantities are :Input Quantity (Parameters) ,Unit and Range.On this page, you should select an available RTD Sensor Type (as shown in Figure 10.2).

In addition, there may be some additional information :Pressure unit (for pressure instruments) decimals (flow instruments), temperature unit (for RTDs/thermocouples) and cold junction compensation temperature (for thermocouples).

Editing DUT Output Data

The Output Quantity includes the corresponding common fields similar with the Input Quantity. The same additional fields are also available for the Output Quantity (as shown in Figure 10.3).

Note :Do not forget to check the transfer function setting at the bottom of the page.

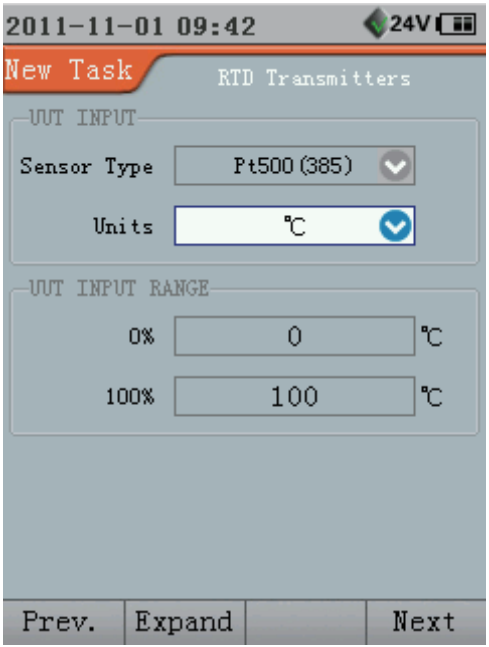

Figure 10.2 Task DUT Input Data

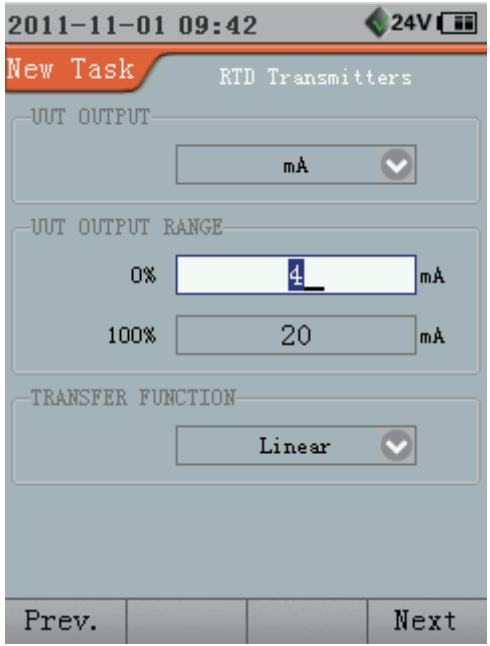

Figure 10.3 Task DUT Input Data

Editing DUT Calibration Data

Then we should set the tolerance and the calibration set points (as shown in Figure 10 4).

The tolerance should be set correctly .Otherwise it will cause undesired result .

Change the calibration points (2 to 11) by press the navigation keys **Left/Right**, the default set points will be calculated automatically.

The default set points are typical values for calibration. If you want to change the value of the task, select the task in the task list then press **Edit** to make the change.

You can edit the points on the Points Edit page.

Press **Enter** or **Finish** when editing is complete.

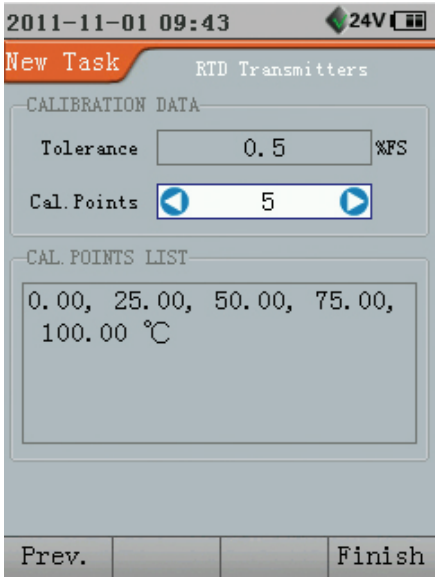

Figure 10 4 Task UUT Calibration Data

10 3 Delete /Erase Tasks

To delete tasks from the memory ,proceed as follows:

On the Tasks List page ,select the task which you want to delete .Press **Delete** and the confirmation dialog box will appea.The task and its calibration data will be deleted permanently by pressing **Enter**.

To erase all tasks(and their calibration data),select “Erase All Tasks” in the Task Management page,and press **Enter** or **Select**.

10 4 Select a Task to Be Calibrated

A task which is already completed is marked with“ √ ” in the list of tasks (as shown in Figure 10 5).

If there is no task in the calibrator’s database ,you can download them from Additel/Cal or create tasks in the calibrator (refer to previous section).

You can select one of the available tasks by pressing **Enter** σ **Select**.

The detailed data will be shown before you run the task .If you want to change the parameters of the task ,you can edit it by pressing **Edit** (as shown in Figure 10.6).

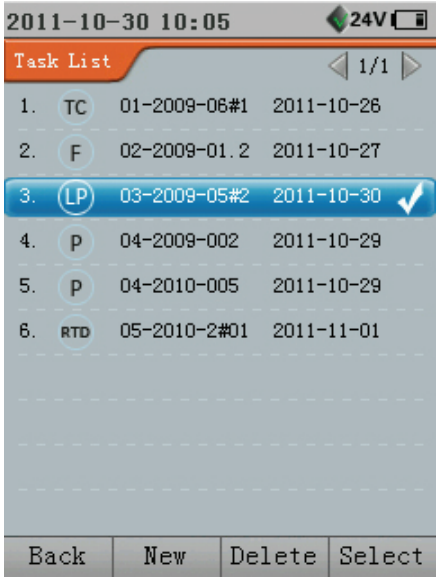

Figure 10 5 Task List

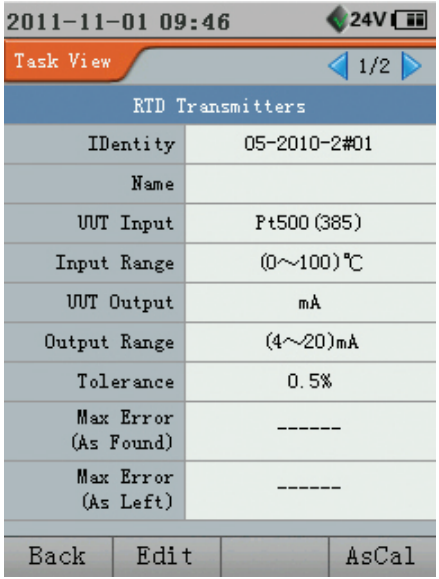

Figure 10 6 Task View

If the task has been completed, the parameters cannot be edited, To use the same task for another calibration ,press“**Save As**”to save it as a new task and the parameters will be editable.

You can press the navigation keys **Left** /**Right** to switch the content in this page.

Before starting a task ,you should ensure the external device is available.

Start the calibration by pressing **Enter** or **AsCal**.

The Calibration Method page will appear to allow you to select between manual or automatical calibration (as shown in Figure 10 7).

Automatic Calibration

Automatic calibration is possible when the calibrator is able to generate/simulate the DUT’s input signal, and measure the DUT’s output signal.

The Step Time (set point delay) setting is in use only when the Calibration Method is set to Automatic. It determines the interval between the two calibration points.

If the DUT is a switch ,this page will display the ramping time.

Manual Calibration

In Manual Calibration, you have to manually set the value that the calibration point requires. Manual calibration is possible in almost all situations, even for calibrations that can be performed automatically.

The Calibration Mode page will appear if the DUT is an indicator or recording device (as shown in Figure 10 8).

Reverse Calibration

Adjust the output signal of the calibrator until the reading of the DUT displays a nominal set point ,then record the reading from the calibrator .The calibrator will calculate the DUT’s theoretical reading accordingly.

In most cases ,the reverse calibration is a very practical method ,which eliminates the trouble of manual recording.

Pressure indictors/recorders are also suitable for reverse calibration .You can apply a pressure to read the pressure gauge then record the reading from the pressure module (calibrator).

Obverse Calibration

The Observe calibration is the traditional way to calibrate. (To make the calibrator output a nominal set point signals , and then record the DUT's actual readings).

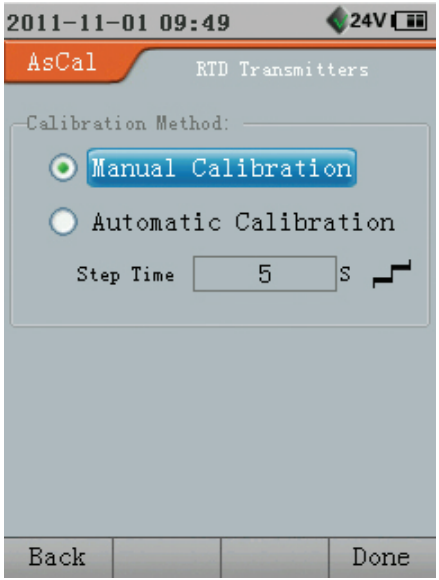

Figure 10 7 AsCal Calibration Method

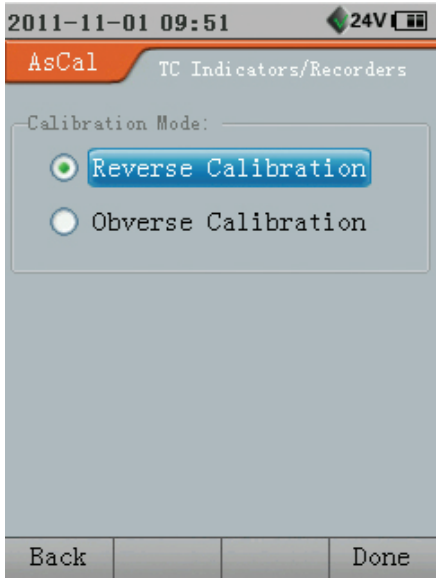

Figure 10 8 AsCal Calibration Mode

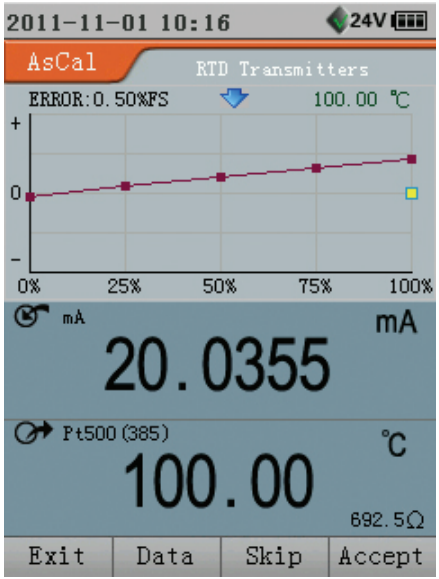

Figure 10 9 AsCal (Graph Mode)

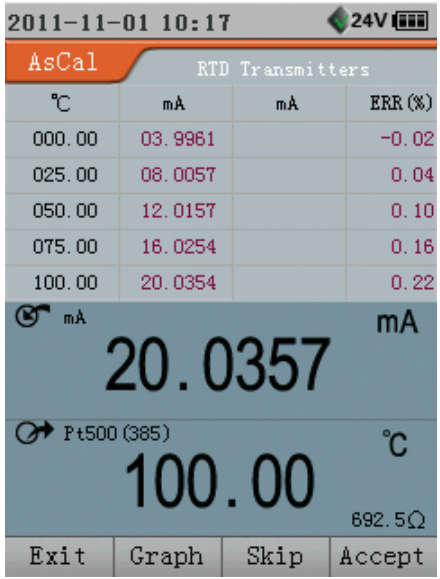

Figure 10 10 AsCal (Data Mode)

After calibration method and calibration mode configuration ,you will enter the AsCal running page (if you have selected manual calibration).

You can switch to the graph viewing mode or data viewing mode by pressing **Data/Graph** (as shown in Figure 10 9 and Figure 10 10).

In the graph mode ,you can see a visual reading of the trend of errors .In the data mode ,you can see the detail data and errors .

On the top of the error graph chart ,you can see the maximum tolerance and set point values.

On the bottom of the error graph chart ,is the input and output information.

You can save the point data and continue to the next point until all points are accepted by pressing **Enter** or **Accept**.

You can skip point (data will not be saved) and continue to the next point by pressing **Skip**.

When all the set points are done ,the AsCal calibration results will appear automatically.

The calibrator calculates the maximum error ,maximum hysteresis ,zero error and span error .Depending on the value of the maximum error ,you can decide whether to adjust the DUT.

If you just make a calibration test ,you can press **Esc** or **Reject** to abort the AsCal calibration.

If you do not want to save the calibration results and continue to calibrate the DUT ,you can press **ReCal** to return to the AsCal running page.

If you want to accept the calibration results ,and save the data .Press **Save** then select the save options.

If the DUT is a HART -Transmitter ,the **Adjust** will be enabled.

Press **Enter** or **Finish**.

10 5 Viewing the Task Results

On the Task List page ,select a completed task (marked with " √ ") and press **Enter** or **Select** .

The overview of the task will appear .The maximum error (As Found and As Left) and parameters of the Task will display on this page.

You can re-calibrate the DUT by pressing **Enter** or **AsCal** as described in the previous section .

If you want to create a similar task based on the current task ,you can press **Save As** to re-name the parameters of the task and save them .

You can see the detail data of task by pressing Result and the error graph and calibration data will appear (as shown in Figure 10 11). If both as -found and as -left are available ,the arrows on top of page will be enabled .Press the navigation keys **Left/Right** to scroll the page ,and the as-found and as-left calibration data will display .

Press **Esc** or **Back** to exit the task results .

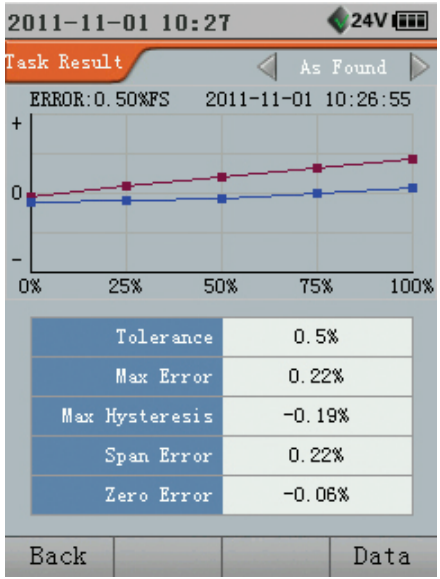

Figure 10 11 Task Result

11 .HART Communication (only ADT223A)

11 1 Brief and note

The Additel 223A has a built -in HART resistor .This HART resistor s current rate is 44mA and its use can be enabled or disabled .

Note 1 : The calibrator can measure current with a range of -30 to 30mA .The calibrator can poll over 15 devices (address 1 to 15) with an external HART resistor .

Note 2 : The HART jacks can endure ± 50V when an external HART resistor is being used .

In the calibrator HART mode ,the calibrator will supply these operations as follows :

- The calibrator can show primary variable (PV), range (%) P,V current value (AO), loop current (CA), secondary variable , a third variable ,and a fourth variable .The secondary ,third and fourth variables are special process variables defined in the transmitter .
- HART diagnostic and service operations will allow you to calibrate a supported HART instrument .
- HART setup operations allow you to configure common parameters of a supported HART instrument .

11 2 Connect to a HART Device

To start communication with a HART device ,press the **HART** button and the calibrator will prompt you to select the HART resistor .Figure 11 1 shows the connection with internal built-in HART resistor .Figure 11 2 shows the connections with an external HART resistor .

To insure the connection is correct refer to Figure 11 1 or 11 2 .To start polling and communicating with a HART device , proceed as follows :

1 .After you have selected internal or external resistor prompted by the calibrator ,press the **Enter** key or the **Select** soft key to start polling HART devices .

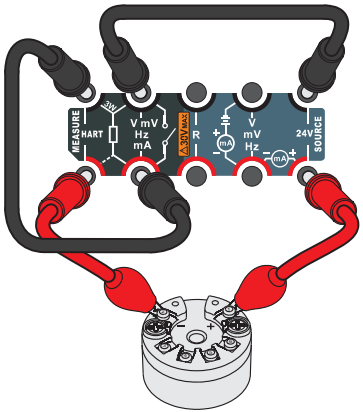

Figure 11.1 the connection with internal built -in resistor

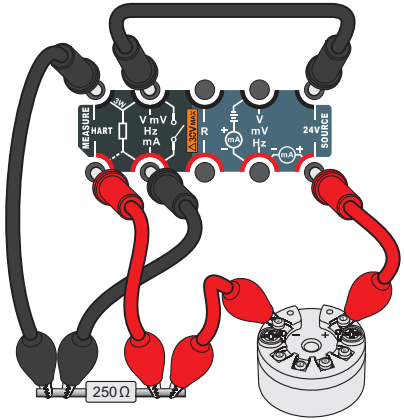

Figure 11.2 the connection with external resistor

2 .The calibrator will try to poll from address 0 to 15 .If there is HART device be found at address 0 ,polling will be stopped and a HART device list will be displayed .Otherwise calibrator will continue searching from address 1 to 15 ,and automatically stop polling at address 15 .During polling ,you can press **Stop** to stop polling process .If more than one HART device is found çalibrator will show the HART device list .A maximum of 15 HART devices can be supported .

3 .Press **Enter** or **Select** to select a HART device from the list .The calibrator will connect to the selected HART device ,and the HART device information will be displayed (As shown in Figure 11 3).

4 .Press **Enter** or **Done** and the calibrator will go back to the main screen in Basic Mode .The HART communication interface

displayed in the measurement display area ,and the HART icon will be shown in the status bar (Figure 11 4) when in the HART mode To press the Esc key or the Back soft key to return to the HART device list to select another HART instrument . When the HART Communication Interface is active ,the **Process**,**Service** and **Setup** soft key are available .You can press the soft key to access to the corresponding HART operations .

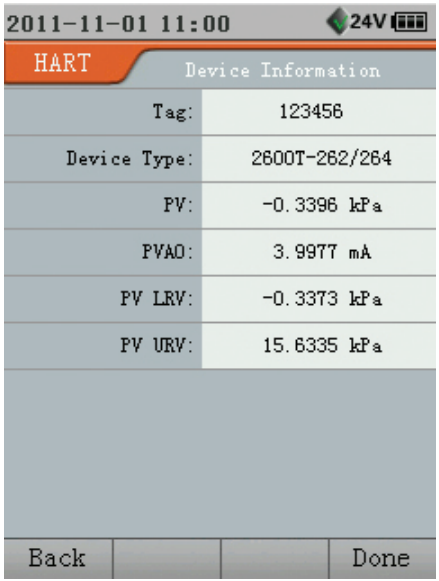

Figure 11.3 HART Device Information

Figure 11.4 HART Communication Interface

11 3 HART Process Variables

When the HART Communication interface is active ,you can press **Process** to show HART Process Variables interface (Figure 11 5). In this interface you can view more HART Process Variables including primary variable (PV), range (%) ,PV current value (AO), loop current (CA), secondary variable, third variable, and fourth variable, PV, %, AO, and CA are selectable (Figure 11.4).

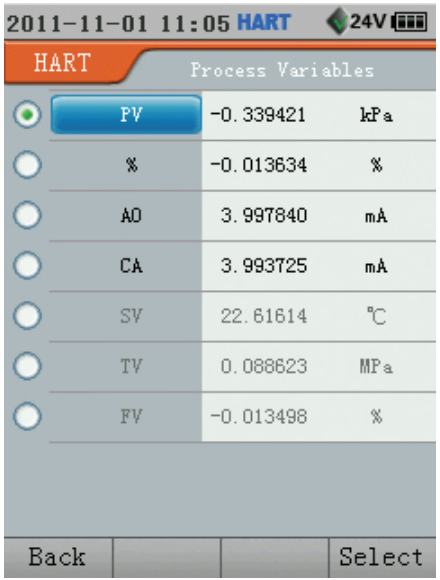

Figure 11.5 HART Process Variables

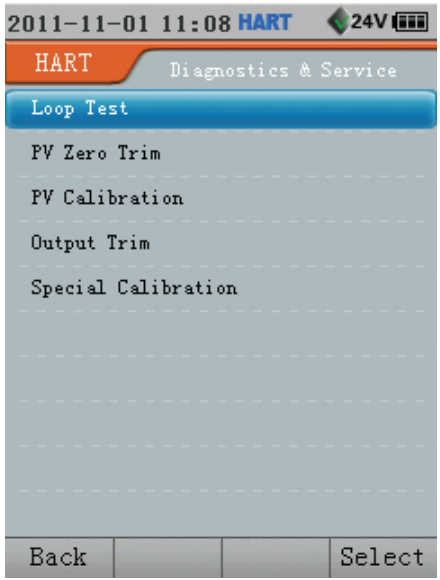

Figure 11.6 HART Diagnostics & Service

11.4 HART Diagnostics and Service

When the measurement is active in HART Communication Interface, you can press Service to display the HART diagnostic and service interface (Figure 11.6). The calibrator provides Loop Test, PV (Primary Variable) Zero Trim, PV Calibration, Output Trim and Special Calibration operations to calibrate a transmitter. Note that Loop Test and Output Trim are not available if the transmitter is in multi-drop mode.

11.4.1 Loop Test

The Loop Test operation will send a command to the transmitter to set its analog output to the specified value. To perform a Loop Test operation, proceed as follows:

1. In the HART diagnostic and service interface, choose Loop Test from list, and press **Enter** or **Select** to show Loop Test interface (Figure 11.7).
2. In this interface, you can use the numeric keypad to input the test current value. Its range is from 4 to 20mA. Then press **Enter** or **Done** to start the Loop Test.
3. If the Loop Test is successfully executed, the PVAO at the top of the interface will show the specified value, the calibrator will show the measured current value in the middle of the interface. Otherwise a popup will indicate the "HART device not found".

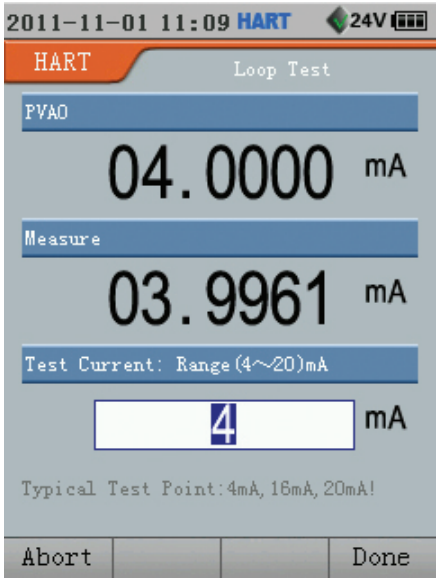

Figure 11.7 HART Loop Test

11.4.2 PV Zero Trim

The PV Zero Trim operation sends a command to the transmitter to set its PV zero. To perform a PV Zero Trim operation, proceed as follows:

1 .In the HART diagnostic and service interface, choose PV Zero Trim from the list and then press **Enter** or **Select** to start the PV zero operation. You will be asked to confirm the PV zero (As shown in Figure 11 8).

2 .Press OK to confirm or Cancel.

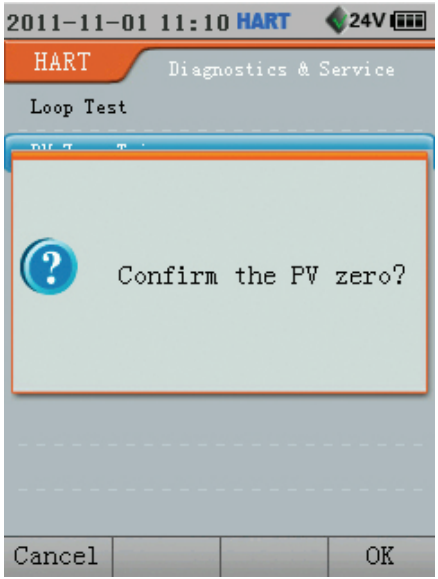

Figure 11 8 HART PV Zero Trim

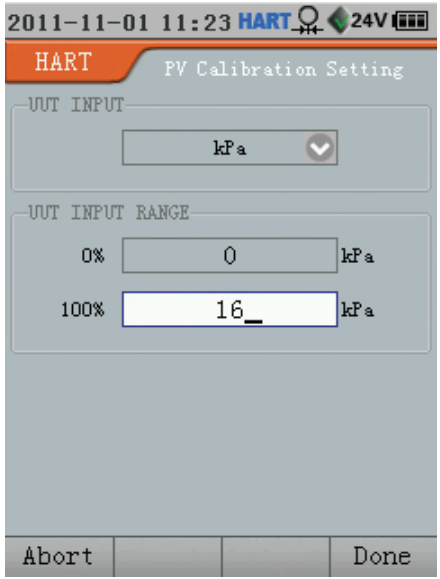

Figure 11 9 HART PV Calibration Setting

11.4.3 PV Calibration

Adjust the HART transmitter's PV LRV and URV to get the consistency between the standard source range and digital analog output (AO). To perform the PV Calibration operation, proceed as follows:

1. In the HART diagnostic and service interface, choose PV Calibration from the list, then press **Enter** or **Select** to show the PV Calibration Setting Interface (Figure 11.9).
2. In the Setting interface, you can set the sensor type and the range of the transmitter. If the device is a pressure transmitter, the pressure module has to be connected to the calibrator and pressure controller such as Additel hand pump is also available for this application. Note: The unit of pressure will be automatically selected by the calibrator based on the previous unit selected.
3. Press **Enter** or **Done** to view the PV Calibration Process interface (Figure 11.10). Note that the calibrator will judge whether these input values are available for the transmitter before starting the PV Calibration Process.
4. The PV calibration process allows you to calibrate the lower (0%) and upper (100%) range values LRV and URV) have been previously set in PV Calibration Setting interface. Located at the top of the PV Calibration interface is the error summary table (Figure 11.10 and Figure 11.11). Once the calibration is complete (Figure 11.11), the PV range adjustment information will be displayed at the bottom of the interface. You can decide whether to adjust PV range. To reject, press **Esc** or **Reject**, to adjust Press **Enter** or **Adjust.**

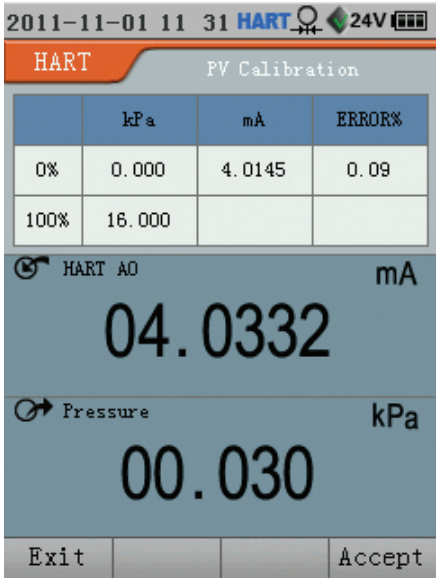

Figure 11.10 HART PV Calibration Process

11 4 4 Special Calibration

Special Calibration is very similar to the PV Calibration operation .The difference is that Special Calibration adjusts the HART transmitter's PV LRV and URV to get the consistency between the standard source ranges and loop current (CA ,while digital analog output AO is described in the PV Calibration operation). Refer to the PV Calibration operations for reference .

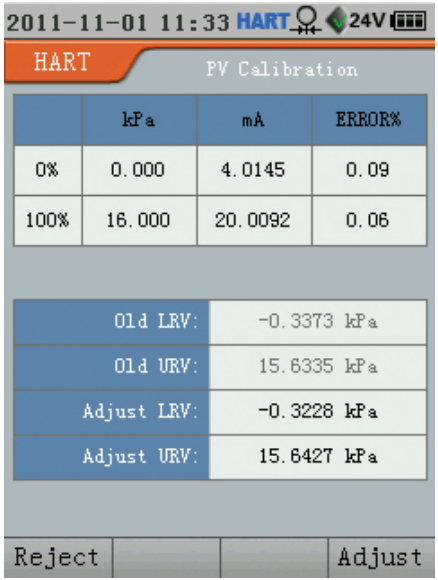

Figure 11 11 HART PV Calibration result

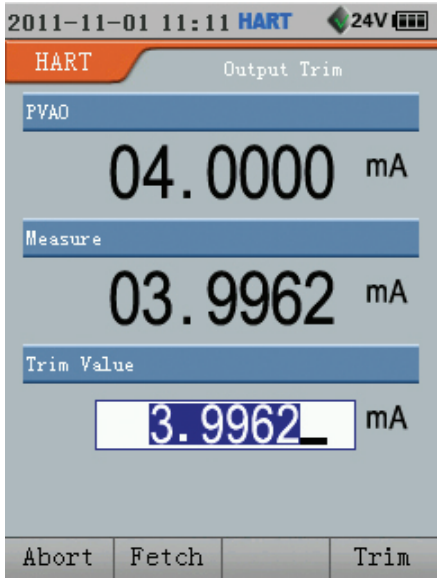

Figure 11 12 HART Output Trim

11 4 5 Output Trim

The Output Trim adjusts the HART transmitter's digital analog output according to the actual loop current measured by the calibrator .To perform an Output Trim ,proceed as follows :

1. In the HART diagnostic and service interface ,choose Output Trim from list ,then you can press **Enter** or **Select** to show the Output trim point selection interface.
2. In this interface ,you can select Low (zero point ,4mA) output trim or high (span point ,20mA) output trim and press **Enter** or **Done** to display the Output Trim interface (as shown in Figure 11 12).
3. In the Output Trim interface ,press **Enter** or **Trim** to execute the output adjustment .The trim value can be fetched by pressing Fetch, or it can be inputted manually .
4. If Output Trim is successfully executed ,the calibrator will goes back to the Output Trim selection interface .You can repeat steps 2 and 3 to start another Output Trim .

11 5 HART Setup

When the measurement is active in HART communication mode ,press **Setup** to show the HART setup interface The calibrator provides five setup functions (refer to table 11 -1).

able 11-1

Setup	Variables	Attributes	Description
Basic	Device Label	Read /Write	English input is available ,no more than 8 characters
	Primary variable range units	Read /Write	Can be changed into any units supported by transmitter
	Primary variable range lower limit	Read /Write	The setting range cannot be less than transmitter range lower limit
	Primary variable range upper limit	Read /Write	The setting range cannot exceed the transmitter range upper limit
	Damping time	Read /Write	Float type ,the value cannot be less than 0
	Transfer function	Read /Write	Can be changed into linear transfer or rooting transfer
Sensor	Sensor S /N	Read only	N /A
	Sensor range lower limit	Read only	N /A
	Sensor range upper limit	Read only	N /A
	Sensor minimum span	Read only	N /A

Device Info .	Date	Read /Write	Device date
	Descriptor	Read /Write	Support English input ,no more than 16 characters
	Message	Read /Write	Support English input ,no more than 32 characters
	Final assembly number	Read only	N /A
HART Output	Write protect	Read only	N /A
	Alarm status	Read only	N /A
	Poll address	Read /Write	Support integer input ,range is 0 to 15
	Burst mode	Read /Write	ON or OFF
	Burst command	Read /Write	Support integer input, range is 0 to 255, acceptable number to HART device
HART Info .	Manufacturer	Read only	N /A
	Device type	Read only	N /A
	Device ID	Read only	N /A
	Software version	Read only	N /A
	Hardware version	Read only	N /A
	Preamble number	Read only	N /A

11 6 Exit HART connection

If the measured tiem is switched to another tiem ,the calibrator will exit the HART communication mode .HART communication will be aborted and the HART icon in the status bar will be hidden .

Additel Corporation

22865 Savi Ranch Parkway Ste F

Yorba Linda, CA 92887, USA

Phone: 714-998-6899

Email: service@additel.com

website: www.additel.com